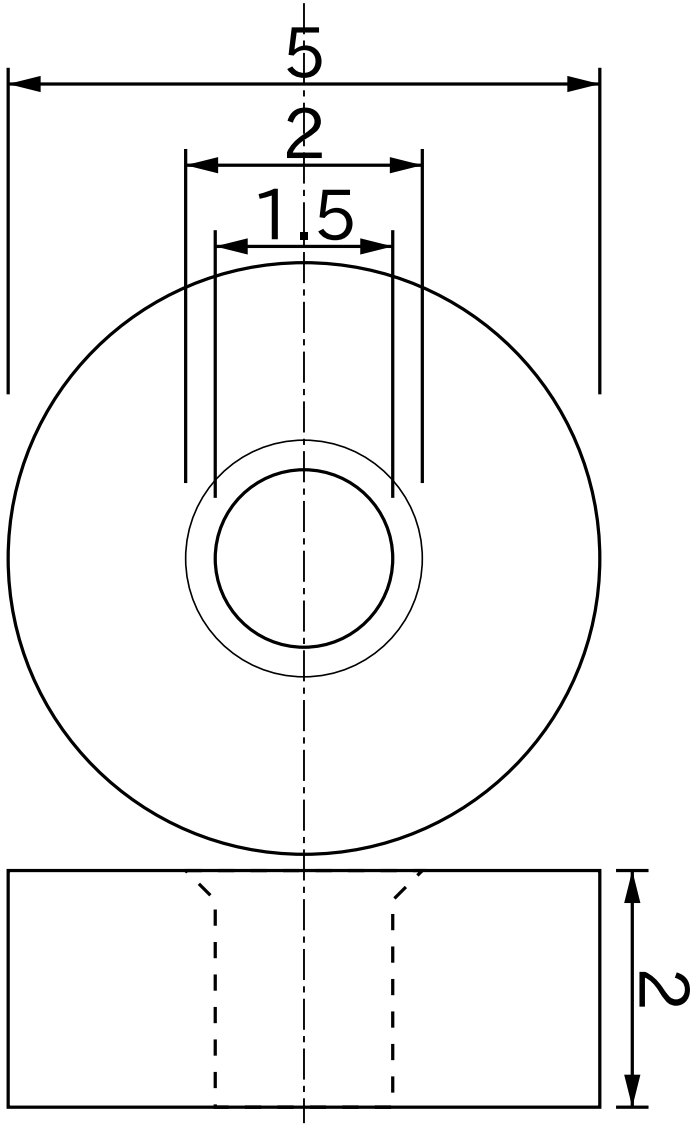


| TITLE | | | | | |
|---|---|---|---|---|---|
| Neodymium Dia5mmXDia1.5mmX2mm/M1.4 N-pole | | | | | |
| DRAWING NUMBER | MATERIAL | GRADE | SURFACE | DATE YYYY/MM/DD | APPROVED |
| NDC0020 | Neodymium | 35 | Ni | 2015/01/31 | Magfine Corporation |

All specifications are subject to change without notice.

Copyright © 2000-2026 Magfine Corporation All Rights Reserved.