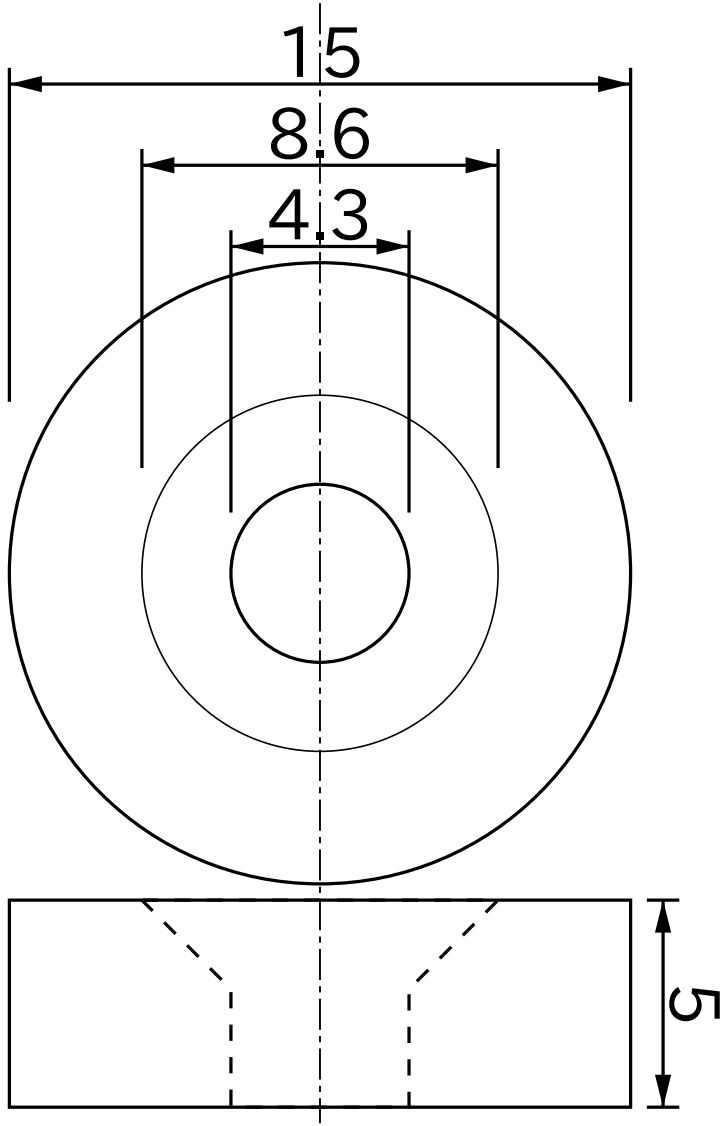

TITLE					
Neodymium Dia15mmXDia4.3mmX5mm/M4 N-pole					
DRAWING NUMBER	MATERIAL	GRADE	SURFACE	DATE YYYY/MM/DD	APPROVED
NDC0013	Neodymium	35	Ni	2015/01/31	Magfine Corporation

All specifications are subject to change without notice.

Copyright © 2000-2026 Magfine Corporation All Rights Reserved.