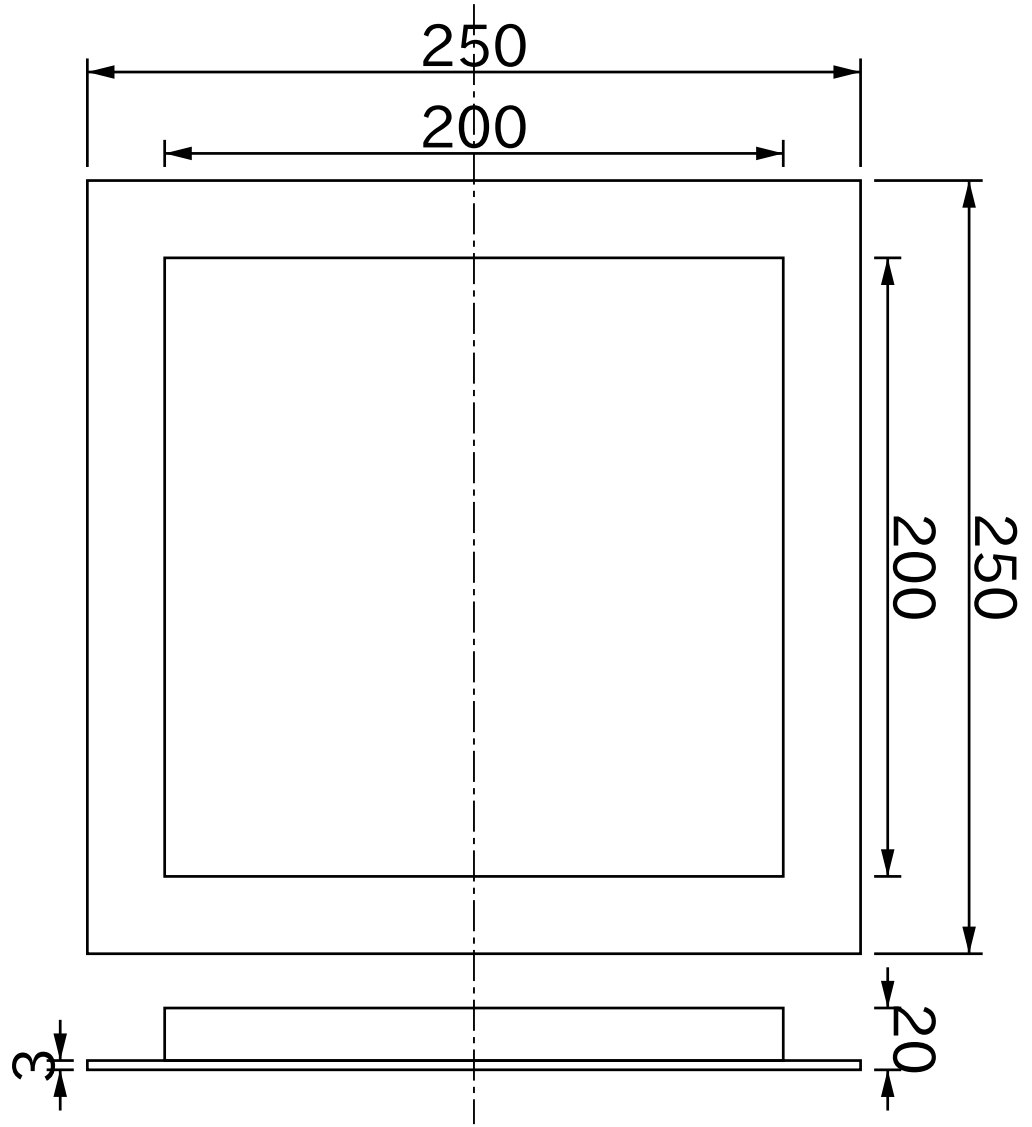

TITLE					
Magnetic Plate L250mmXl200mmXW250mmXw200mmXH20mm					
DRAWING NUMBER	MATERIAL	GRADE	SURFACE	DATE YYYY/MM/DD	APPROVED
MPA20	Magnetic Plate	316	Stainless	2015/01/31	Magfine Corporation

All specifications are subject to change without notice.

Copyright © 2000-2026 Magfine Corporation All Rights Reserved.