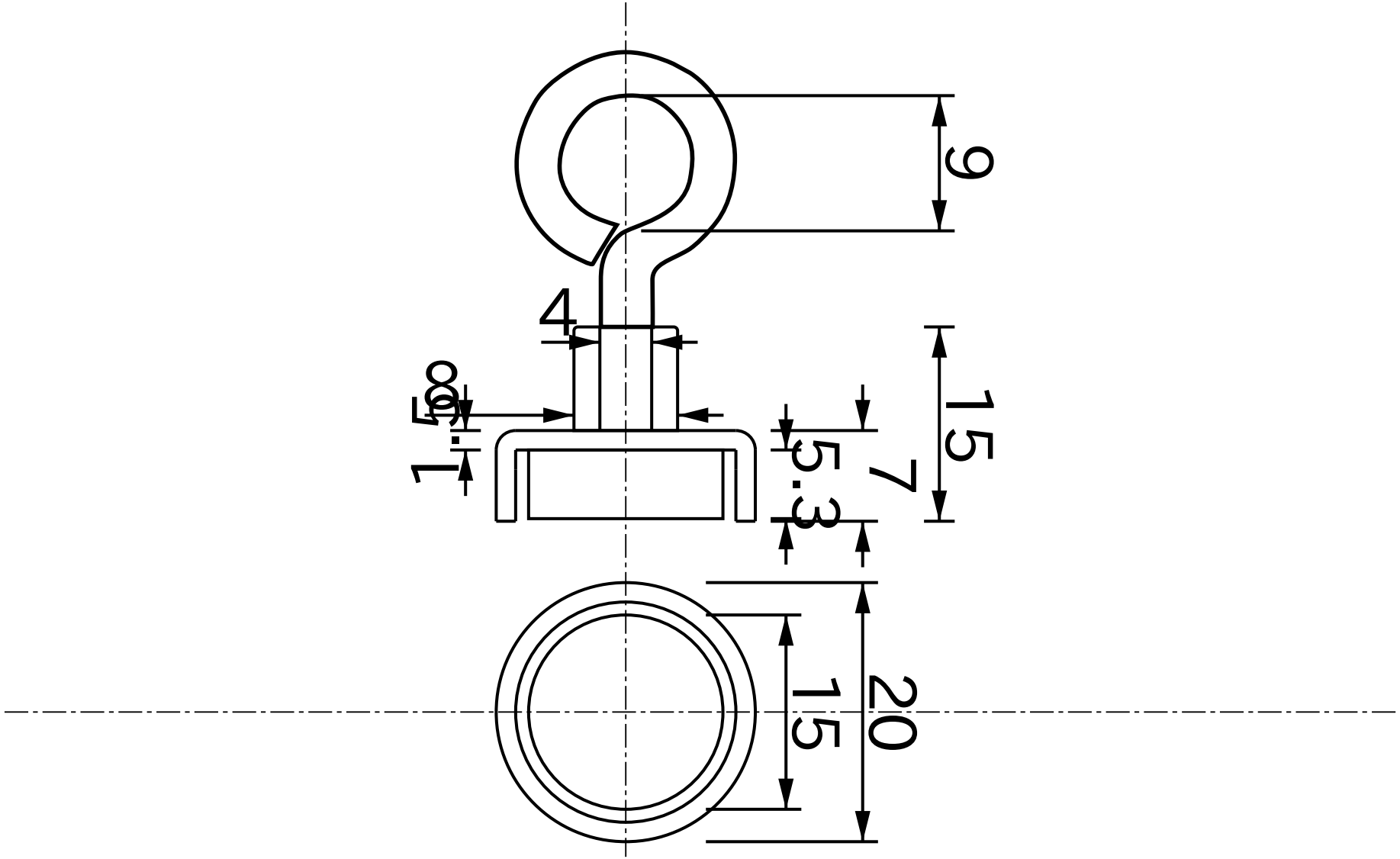

TITLE					
Pot Cap Neodymium Dia20mmX7mm Eyelet N-pole					
DRAWING NUMBER	MATERIAL	GRADE	SURFACE	DATE YYYY/MM/DD	APPROVED
F20	Pot Cap Neodymium	35	Ni	2015/04/30	Magfine Corporation

All specifications are subject to change without notice.

Copyright © 2000-2026 Magfine Corporation All Rights Reserved.