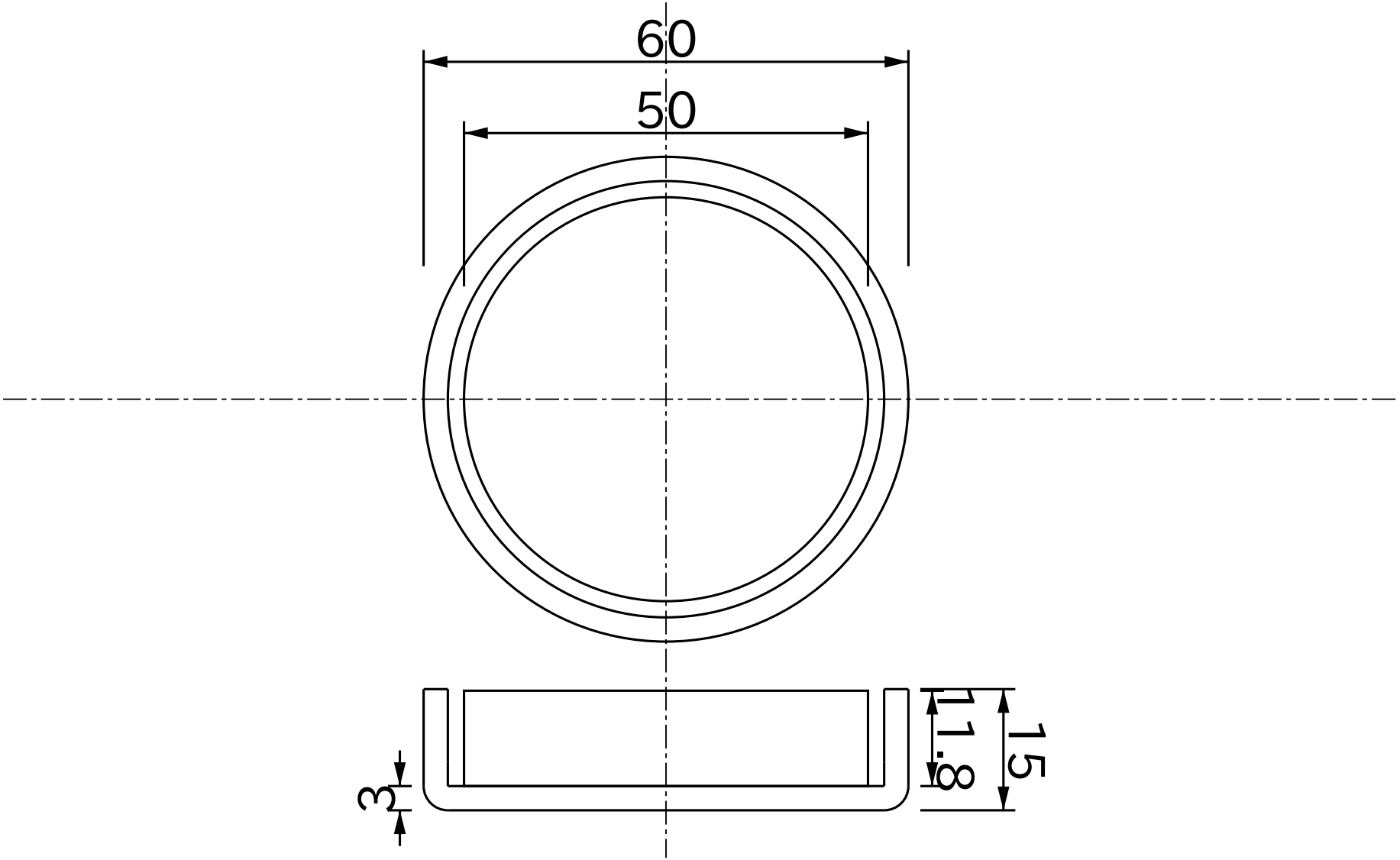

TITLE					
Pot Cap Neodymium Dia60mmX15mm					
DRAWING NUMBER	MATERIAL	GRADE	SURFACE	DATE YYYY/MM/DD	APPROVED
G60	Pot Cap Neodymium	35	Ni	2017/02/12	Magfine Corporation

All specifications are subject to change without notice.

Copyright © 2000-2026 Magfine Corporation All Rights Reserved.