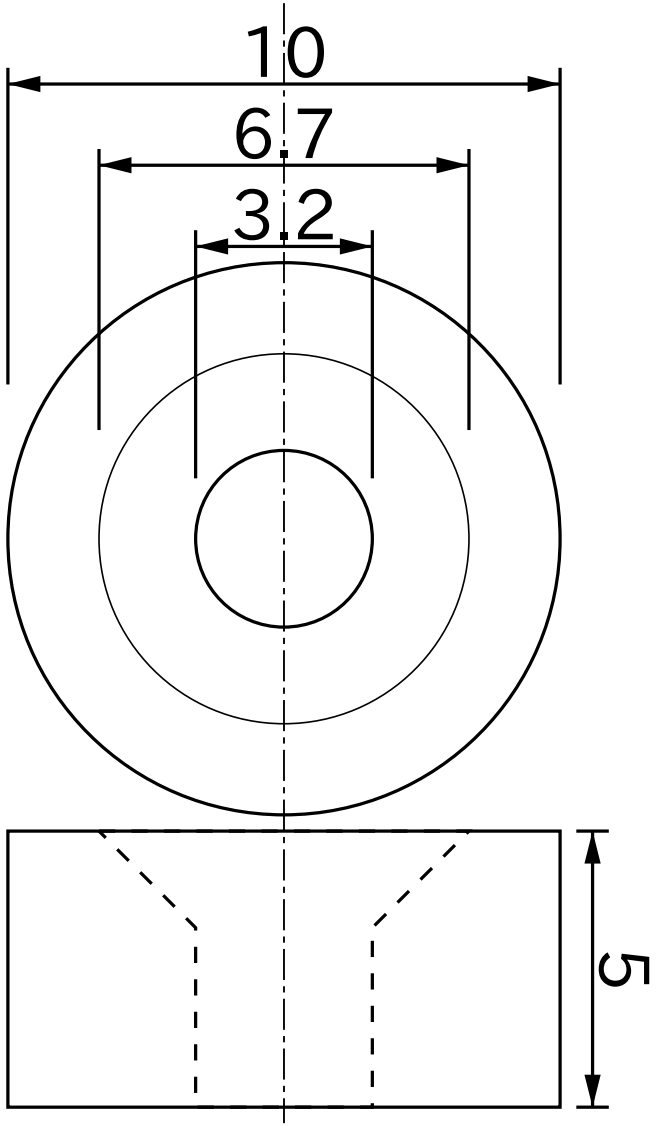

TITLE					
Neodymium Dia10mmXDia3.2mmX5mm/M3 S-pole					
DRAWING NUMBER	MATERIAL	GRADE	SURFACE	DATE YYYY/MM/DD	APPROVED
NDC0010	Neodymium	35	Ni	2017/06/20	Magfine Corporation

All specifications are subject to change without notice.

Copyright © 2000-2026 Magfine Corporation All Rights Reserved.