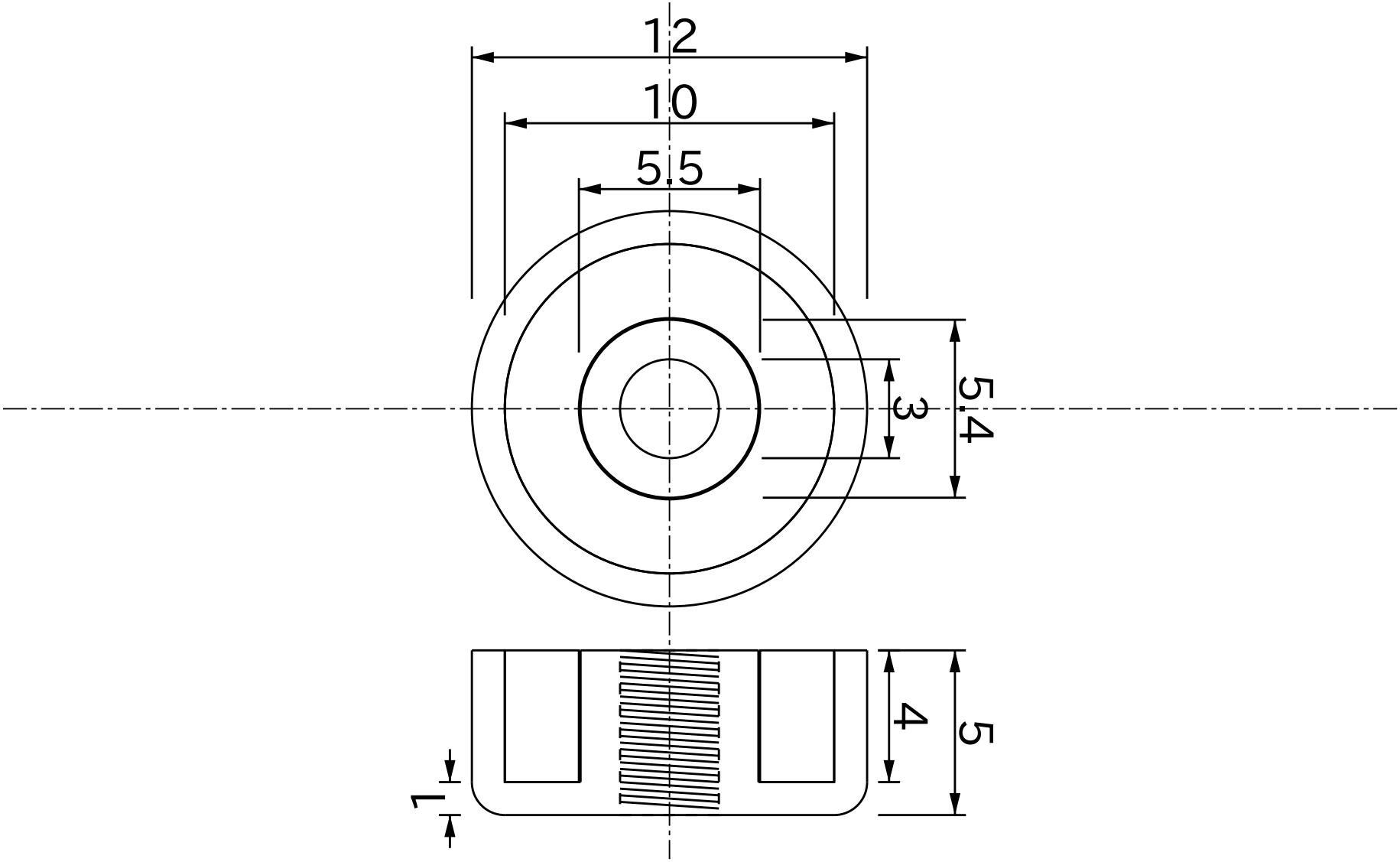

TITLE					
Pot Cap Neodymium Dia12mmX5mm/M3 Internal thread N-pole					
DRAWING NUMBER	MATERIAL	GRADE	SURFACE	DATE YYYY/MM/DD	APPROVED
H12	Pot Cap Neodymium	35	Ni	2017/06/20	Magfine Corporation

All specifications are subject to change without notice.

Copyright © 2000-2024 Magfine Corporation All Rights Reserved.