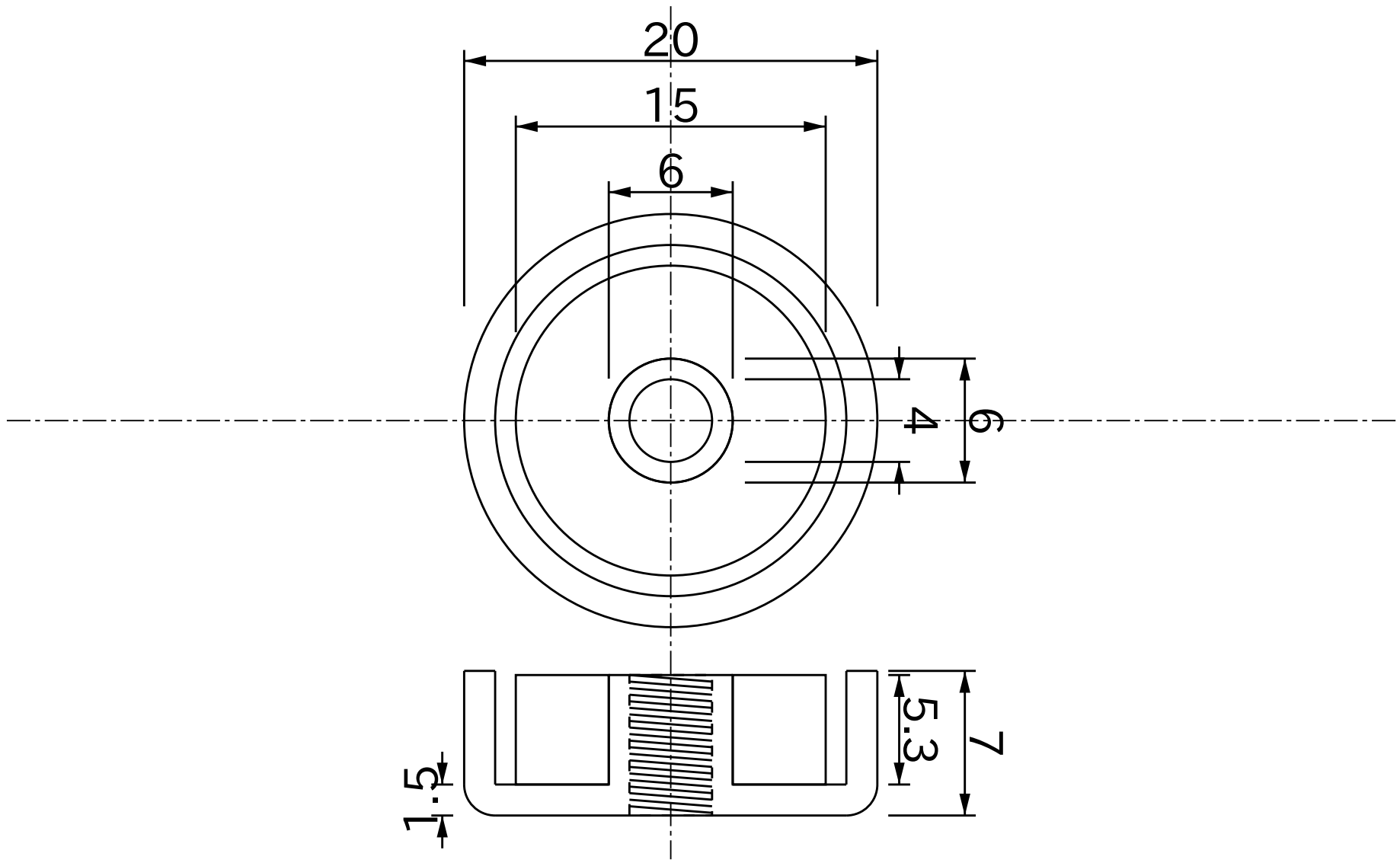


| TITLE | | | | | |
|---|---|---|---|---|---|
| Pot Cap Neodymium Dia20mmX7mm/M4 Internal thread S-pole | | | | | |
| DRAWING NUMBER | MATERIAL | GRADE | SURFACE | DATE YYYY/MM/DD | APPROVED |
| H20 | Pot Cap Neodymium | 35 | Ni | 2017/10/06 | Magfine Corporation |

All specifications are subject to change without notice.

Copyright © 2000-2026 Magfine Corporation All Rights Reserved.