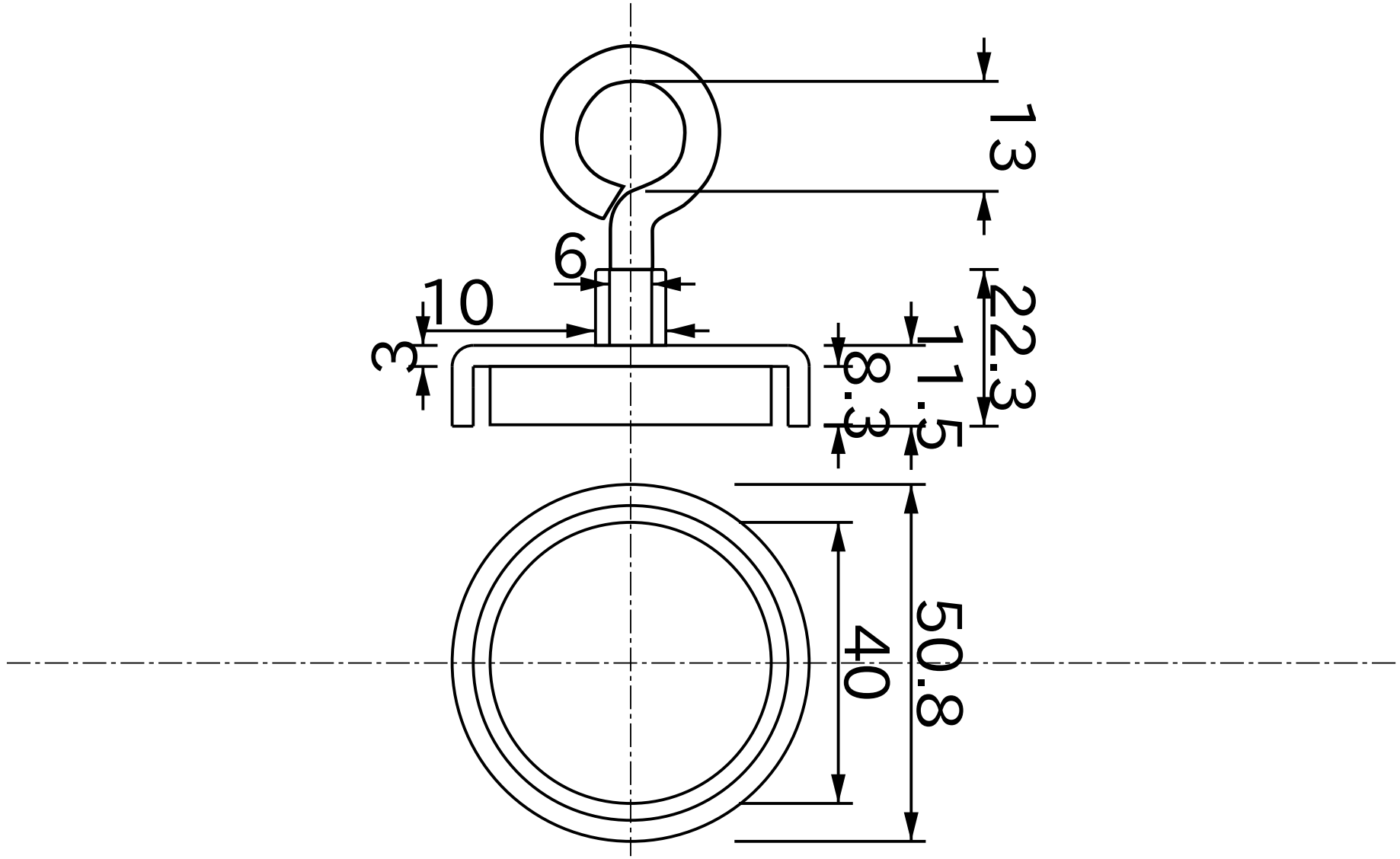

TITLE					
Pot Cap Neodymium Dia50.8mmX11.5mm Eyelet					
DRAWING NUMBER	MATERIAL	GRADE	SURFACE	DATE YYYY/MM/DD	APPROVED
F50.8	Pot Cap Neodymium	35	Ni	2018/09/08	Magfine Corporation

All specifications are subject to change without notice.

Copyright © 2000-2026 Magfine Corporation All Rights Reserved.