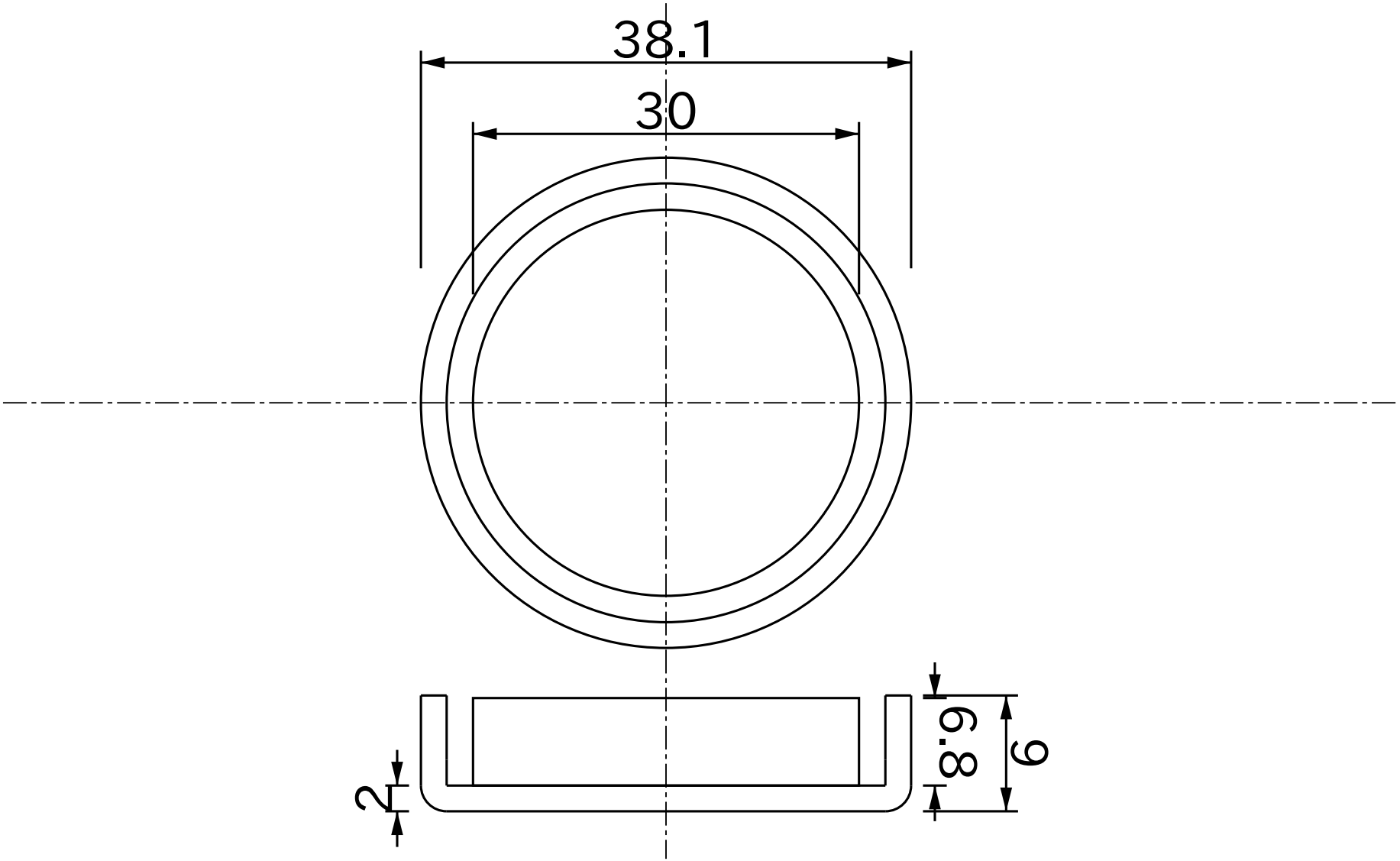

TITLE					
Pot Cap Neodymium Dia38.1mmX9mm					
DRAWING NUMBER	MATERIAL	GRADE	SURFACE	DATE YYYY/MM/DD	APPROVED
G38	Pot Cap Neodymium	35	Ni	2018/09/08	Magfine Corporation

All specifications are subject to change without notice.

Copyright © 2000-2026 Magfine Corporation All Rights Reserved.